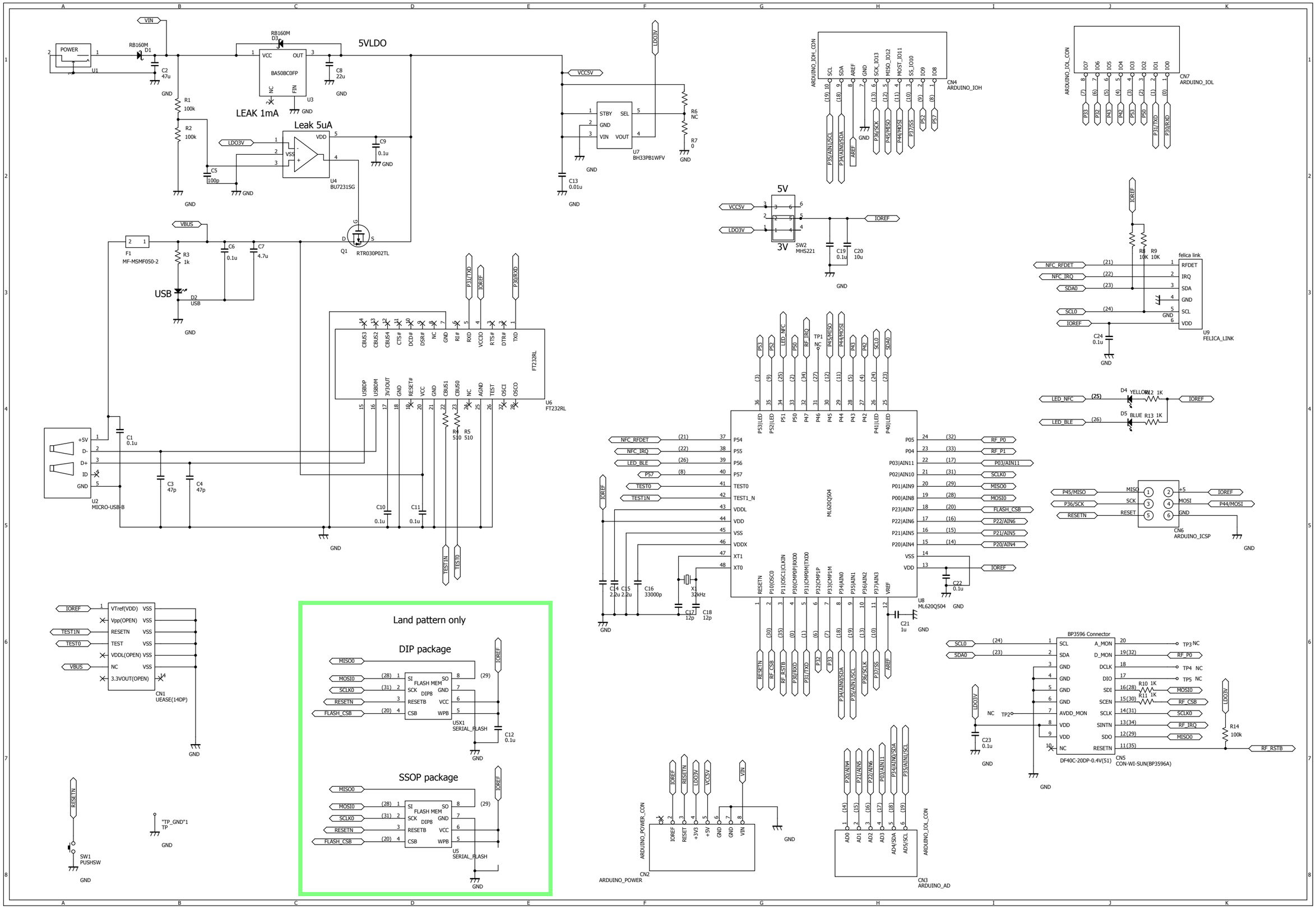
VIN
POWER
RB160M
D1
U1
C2
47u
GND
R1
100k
R2
100k
RB160M
D3
5VLDO
VCC
OUT
BA50BC0FP
NC
FIN
U3
C8
22u
LEAK 1mA
Leak 5uA
LDO3V
VDD
VSS
C9
0.1u
C5
100p
U4
BU7231SG
VCC5V
STBY
SEL
GND
VIN
VOUT
U7
BH33PB1WFV
R6
NC
R7
0
C13
0.01u
VBUS
F1
MF-MSMF050-2
R3
1k
C6
0.1u
C7
4.7u
USB
D2
USB
Q1
RTR030P02TL
FT232RL
U6
FT232RL
CBUS3
CBUS2
CBUS4
CTS#
DCD#
DSR#
NC
GND
RI#
RXD
VCCIO
RTS#
DTR#
TXD
USBDP
USBDM
3V3OUT
RESET#
VCC
CBUS1
CBUS0
AGND
TEST
OSCI
OSCO
R4
510
R5
510
P31/TXD
IOREF
P30/RXD
TEST1N
TEST0
C1
0.1u
C3
47p
C4
47p
C10
0.1u
C11
0.1u
U2
MICRO-USB-B
+5V
D-
D+
ID
ARDUINO_IOH_CON
SCL
SDA
AREF
SCK_IO13
MISO_IO12
MOST_IO11
SS_IO10
IO9
IO8
CN4
ARDUINO_IOH
P35/AIN1/SCL
P34/AIN0/SDA
P36/SCK
P45/MISO
P44/MOSI
P37/SS
P52
P57
ARDUINO_IOL_CON
IO7
IO6
IO5
IO4
IO3
IO2
IO1
IO0
CN7
ARDUINO_IOL
P33
P32
P43
P42
P53
P50
P31/TXD
P30/RXD
5V
3V
SW2
MHSZ21
C19
0.1u
C20
10u
IOREF
R8
10K
R9
10K
felica link
NFC_RFDET
NFC_IRQ
SDA0
SCL0
RFDET
IRQ
SDA
GND
SCL
VDD
C24
0.1u
U9
FELICA_LINK
LED_NFC
LED_BLE
D4
YELLOW
R12
1K
D5
BLUE
R13
1K
P53|LED
P52|LED
LED_NFC
P51
P50
RF_IRQ
P47
P46
P45/MISO
P44/MOSI
P43
P42
SCL0
SDA0
P41|LED
P40|LED
TP1
NC
P54
P55
P56
P57
TEST0
TEST1_N
VDDL
VDD
VSS
VDDX
XT1
XT0
ML620Q504
P05
P04
P03|AIN11
P02|AIN10
P01|AIN9
P00|AIN8
P23|AIN7
P22|AIN6
P21|AIN5
P20|AIN4
VSS
VDD
RF_P0
RF_P1
P03/AIN11
SCLK0
MISO0
MOSI0
FLASH_CSB
P22/AIN6
P21/AIN5
P20/AIN4
C22
0.1u
U8
ML620Q504
C14
2.2u
C15
2.2u
C16
33000p
X1
32kHz
C17
12p
C18
12p
RESETN
P10|OSC0
P11|OSC1|CLKIN
P30|CMP0P|RXD0
P31|CMP0M|TXD0
P32|CMP1P
P33|CMP1M
P34|AIN0
P35|AIN1
P36|AIN2
P37|AIN3
VREF
RF_RSTB
P32
P33
P34/AIN0/SDA
P35/AIN1/SCL
P36/SCLK
P37/SS
AREF
C21
1u
P45/MISO
P36/SCK
RESETN
MISO
SCK
RESET
+5
MOSI
GND
CN6
ARDUINO_ICSP
IOREF
VTref(VDD)
Vpp(OPEN)
RESETN
TEST
VDDL(OPEN)
NC
3.3VOUT(OPEN)
VSS
CN1
UEASE(14DP)
BP3596 Connector
SCL
SDA
GND
AVDD_MON
VDD
NC
A_MON
D_MON
DCLK
DIO
SDI
SCEN
SCLK
SINTN
SDO
RESETN
TP3 NC
TP4 NC
TP5 NC
RF_P0
MOSI0
RF_CSB
SCLK0
RF_IRQ
MISO0
RF_RSTB
R10 1K
R11 1K
R14
100k
C23
0.1u
TP2
DF40C-20DP-0.4V(51)
CN5
CON-WI-SUN(BP3596A)
Land pattern only
DIP package
MISO0
MOSI0
SCLK0
RESETN
FLASH_CSB
SI
SCK
RESETB
CSB
SO
GND
VCC
WPB
FLASH MEM
DIP8
U5X1
SERIAL_FLASH
C12
0.1u
SSOP package
U5
SERIAL_FLASH
RESETN
SW1
PUSHSW
"TP_GND"1
TP
ARDUINO_POWER_CON
IOREF
RESET
+3V3
+5V
GND
VIN
CN2
ARDUINO_POWER
ARDUINO_IOL_CON
AD0
AD1
AD2
AD3
AD4/SDA
AD5/SCL
CN3
ARDUINO_AD